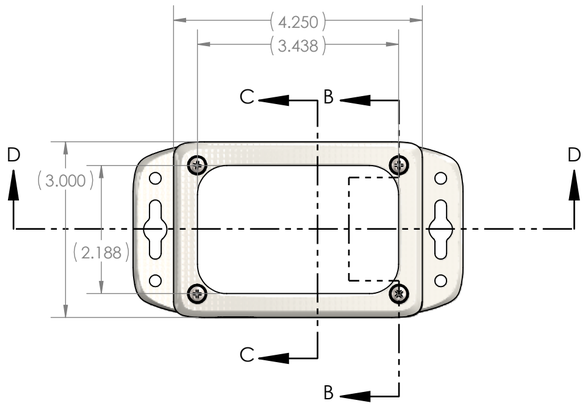

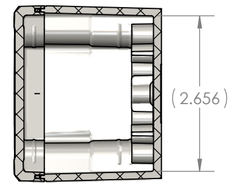

SECTION C-C

BOM Table							
ITEM NO.	PART NUMBER	Rev.	Description	Material	FlameRating	Color	QTY.
1	HN-34BF-01	1	BASE W/BRASS INSERTS		-		1
1.1	HN-34BFN-01	1	BASE W/FLANGES	PC	UL94-5VA	LIGHT GRAY	1
1.2	INSERTS-3	0	THREADED INSERT #6-32	BRASS			4
1.3	LABEL-100	0	UL LABEL				1
2	HN-34CG-01	0	COVER WITH GASKET		-		1
2.1	HN-34C-01	1	COVER	PC	UL94-5VA	LIGHT GRAY	1
2.2	HN-34G	1	GASKET	SILICONE		CLEAR	1
3	SCREWS-054	0	6-32 X 1.125 Pan Head Captive Panel Screw	18-8 STAINLESS STEEL			4

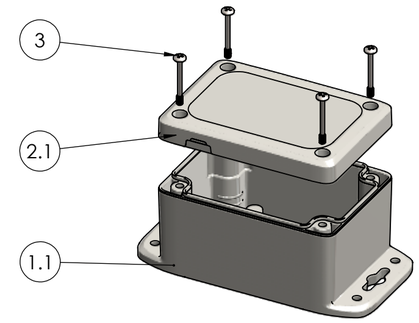

PART NUMBER: HN-34-01
FLAME RATING: UL94-5VA
WEIGHT(lbs): 0.4129

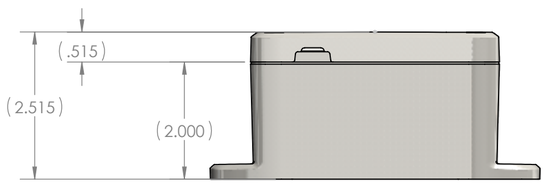

BOM Table							
ITEM NO.	PART NUMBER	Rev.	Description	Material	FlameRating	Color	QTY.
21	HN-34BF-01	1	BASE W/BRASS INSERTS		-		1
21.1	HN-34BFN-01	1	BASE W/FLANGES	PC	UL94-5VA	LIGHT GRAY	1
21.2	INSERTS-3	0	THREADED INSERT #6-32	BRASS			4
21.3	LABEL-100	0	UL LABEL				1
22	HN-34CG-02	0			-		1
22.1	HN-34C-02	1	COVER	PC	UL94V-0	CLEAR	1
22.2	HN-34G	1	GASKET	SILICONE		CLEAR	1
23	SCREWS-054	0	6-32 X 1.125 Pan Head Captive Panel Screw	18-8 STAINLESS STEEL			4

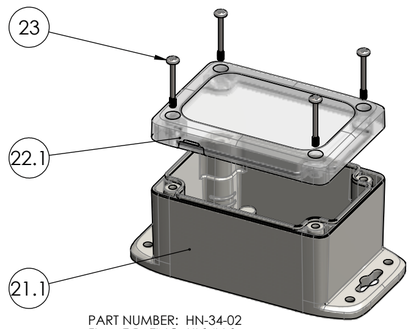

PART NUMBER: HN-34-02
FLAME RATING: UL94V-0
WEIGHT(lbs): 0.4129

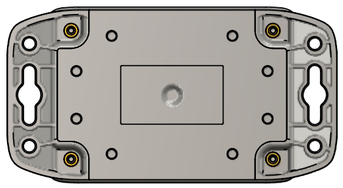

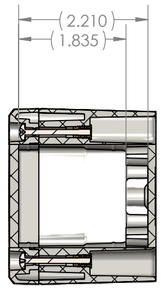

SECTION B-B

BOM Table							
ITEM NO.	PART NUMBER	Rev.	Description	Material	FlameRating	Color	QTY.
31	HN-34BF-00	1	BASE W/BRASS INSERTS		-		1
31.1	HN-34BFN-00	1	BASE W/FLANGES	PC	UL94-5VA	BLACK	1
31.2	INSERTS-3	0	THREADED INSERT #6-32	BRASS			4
31.3	LABEL-100	0	UL LABEL				1
32	HN-34CG-00	0	COVER WITH GASKET		-		1
32.1	HN-34C-00	1	COVER	PC	UL94-5VA	BLACK	1
32.2	HN-34G	1	GASKET	SILICONE		CLEAR	1
33	SCREWS-054	0	6-32 X 1.125 Pan Head Captive Panel Screw	18-8 STAINLESS STEEL			4

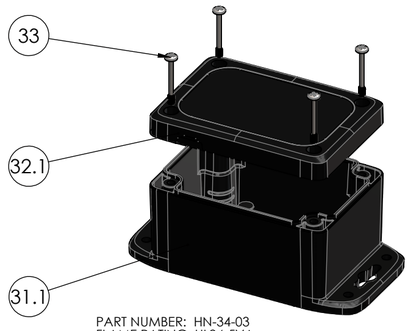

PART NUMBER: HN-34-03
FLAME RATING: UL94-5VA
WEIGHT(lbs): 0.4129

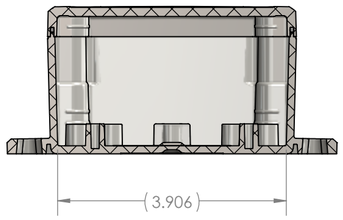

SECTION D-D

BOM Table							
ITEM NO.	PART NUMBER	Rev.	Description	Material	FlameRating	Color	QTY.
41	HN-34BF-00	1	BASE W/BRASS INSERTS		-		1
41.1	HN-34BFN-00	1	BASE W/FLANGES	PC	UL94-5VA	BLACK	1
41.2	INSERTS-3	0	THREADED INSERT #6-32	BRASS			4
41.3	LABEL-100	0	UL LABEL				1
42	HN-34CG-02	0			-		1
42.1	HN-34C-02	1	COVER	PC	UL94V-0	CLEAR	1
42.2	HN-34G	1	GASKET	SILICONE		CLEAR	1
43	SCREWS-054	0	6-32 X 1.125 Pan Head Captive Panel Screw	18-8 STAINLESS STEEL			4

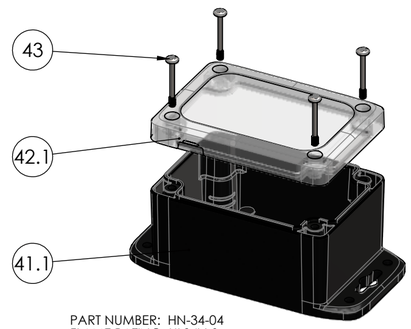

PART NUMBER: HN-34-04
FLAME RATING: UL94V-0
WEIGHT(lbs): 0.4129

REV.	COMMENT	ZONE	REVISED BY	CREATION DATE
1	revised base and label		Douglas French	12/31/2025
0			Douglas French	12/8/2025

REVISIONS

UNLESS OTHERWISE SPECIFIED:
DIMENSIONS ARE IN: INCHES[mm]
TOLERANCES: ANGULAR: ±2°
TWO PLACE DECIMAL: ±.010
THREE PLACE DECIMAL: ±.005
PRINTED GRAPHICS: ±.010

PROPRIETARY AND CONFIDENTIAL
THE INFORMATION CONTAINED IN THIS DRAWING IS THE SOLE PROPERTY OF POLYCASE. ANY REPRODUCTION IN PART OR AS A WHOLE WITHOUT THE WRITTEN PERMISSION OF POLYCASE IS PROHIBITED.

CAD FILE: HN-34-0x

PART NO.
SEE BOM

MATERIAL

FLAME RATING
-

SIZE
C

ASSEMBLY

REV
1

	NAME	DATE
DRAWN	D.M.F.	
CHECKED	-	

SCALE: 1:2

SHEET 1 OF 1

polycase
1305 CHESTER IND. PARKWAY AVON, OHIO 44011-1083 U.S.A.
PH#: 1-800-248-1233, 440-934-0444 FAX#: 440-934-0088